US 20100106854A1

(19) United States

(12) Patent Application Publication

Kim et al.

(10) Pub. No.: US 2010/0106854 A1

(43) Pub. Date: Apr. 29, 2010

(54) SYSTEM AND METHOD FOR CONTROLLING NON-EXISTING DOMAIN TRAFFIC

(75) Inventors: **JooYong Kim**, Des Plaines, IL (US); **Youngbae Oh**, Chicago, IL (US); **Simon Thomas Kirby**, North Vancouver (CA)

Correspondence Address:
BRINKS HOFER GILSON & LIONE
P.O. BOX 10395
CHICAGO, IL 60610 (US)

(73) Assignee: **Hostway Corporation**, Chicago, IL (US)

(21) Appl. No.: **12/260,785**

(22) Filed: **Oct. 29, 2008**

Publication Classification

(51) **Int. Cl.**
G06F 15/173 (2006.01)

(52) **U.S. Cl.** **709/238**

(57) **ABSTRACT**

A system and method for controlling internet traffic controls internet traffic directed to a non-existing domain in a centralized manner. Instead of a non-existing domain response, the user may receive alternative responses such as a landing page including useful information and resourceful suggestions under the control of a global controller. The centralized control over the user's request may be implemented by redirecting a DNS query to the global controller or an optimal search guide server at an individual internet service provider level. Redirection of the DNS query may involve a record modification of a domain name resolution response indicating the non-existing domain.

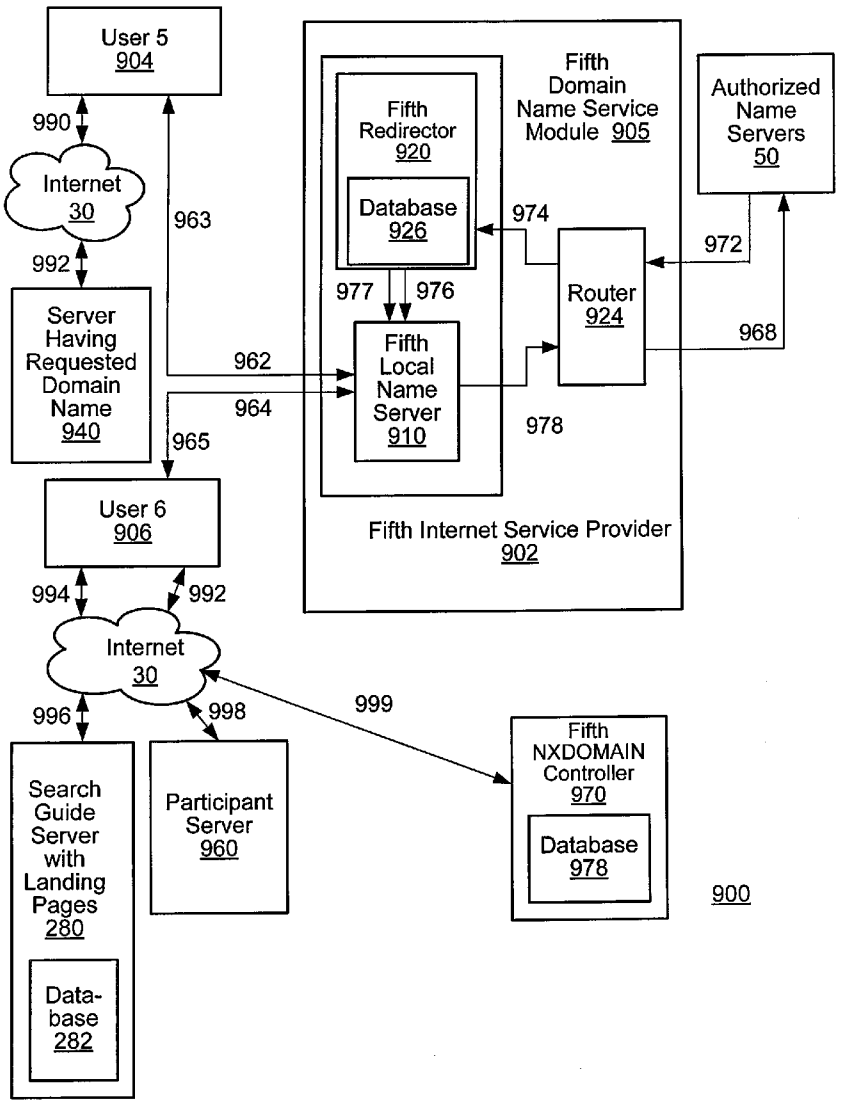

Fig. 1

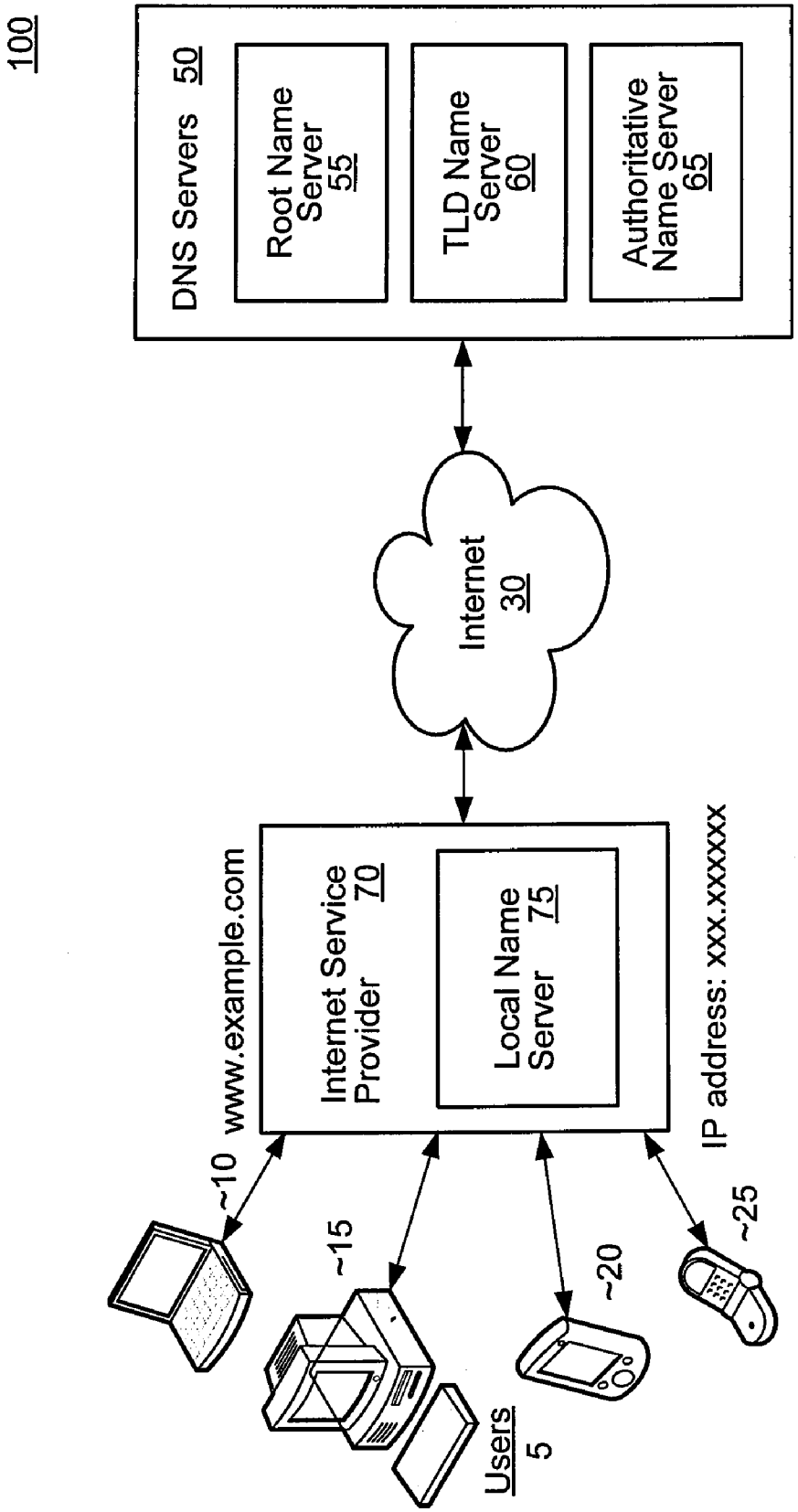
100
DNS Servers 50
Root Name Server 55
TLD Name Server 60
Authoritative Name Server 65
Internet 30
Internet Service Provider 70
Local Name Server 75
www.example.com
IP address: xxx.xxxxx
~10
~15
~20
~25
Users 5

Fig. 2

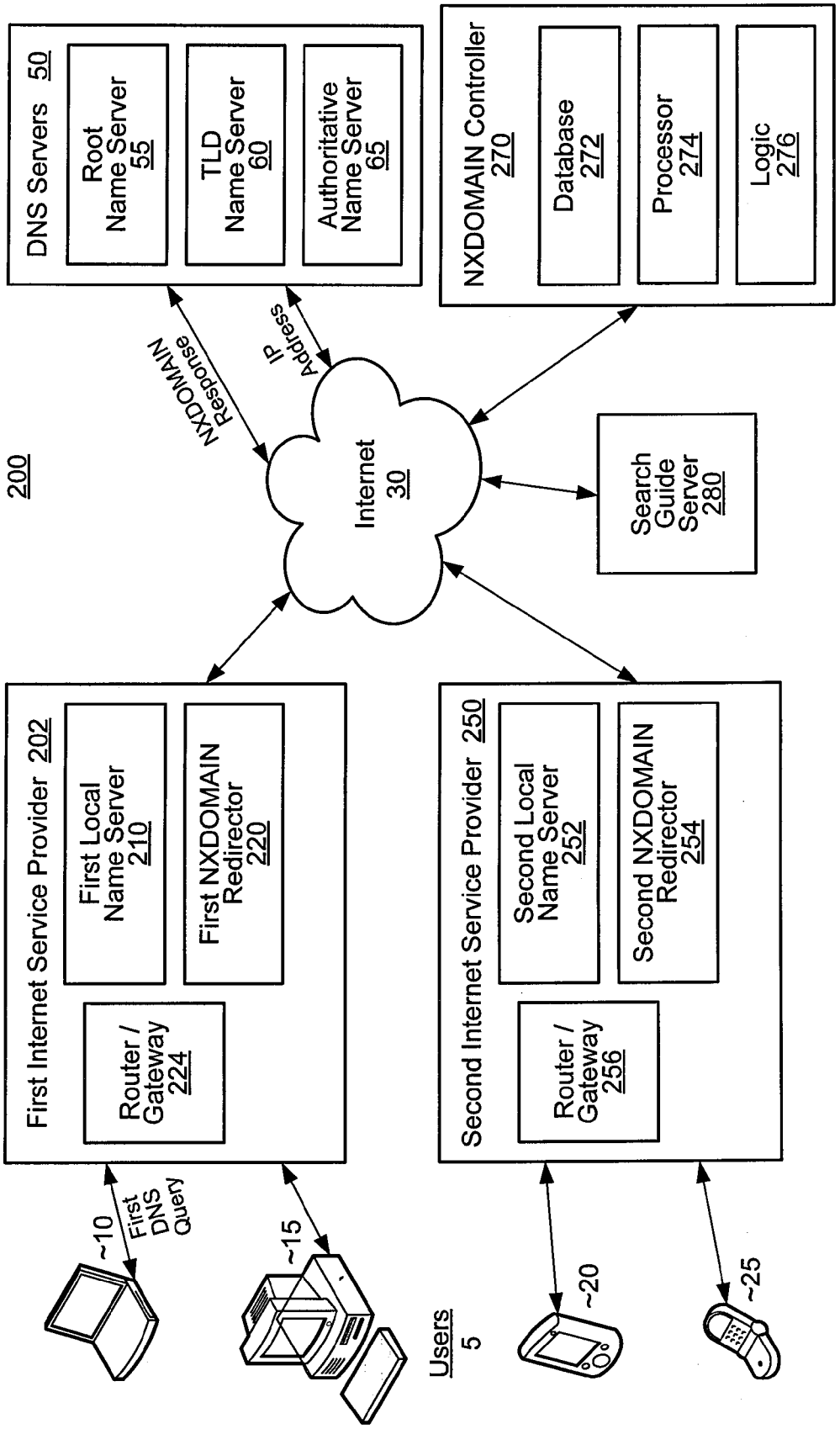
200
DNS Servers 50
Root Name Server 55
TLD Name Server 60
Authoritative Name Server 65
NXDOMAIN Controller 270
Database 272
Processor 274
Logic 276
NXDOMAIN Response
IP Address
Internet 30
Search Guide Server 280
First Internet Service Provider 202
First Local Name Server 210
First NXDOMAIN Redirector 220
Router / Gateway 224
Second Internet Service Provider 250
Second Local Name Server 252
Second NXDOMAIN Redirector 254
Router / Gateway 256
~10
First DNS Query
~15
Users 5
~20
~25

Fig. 3

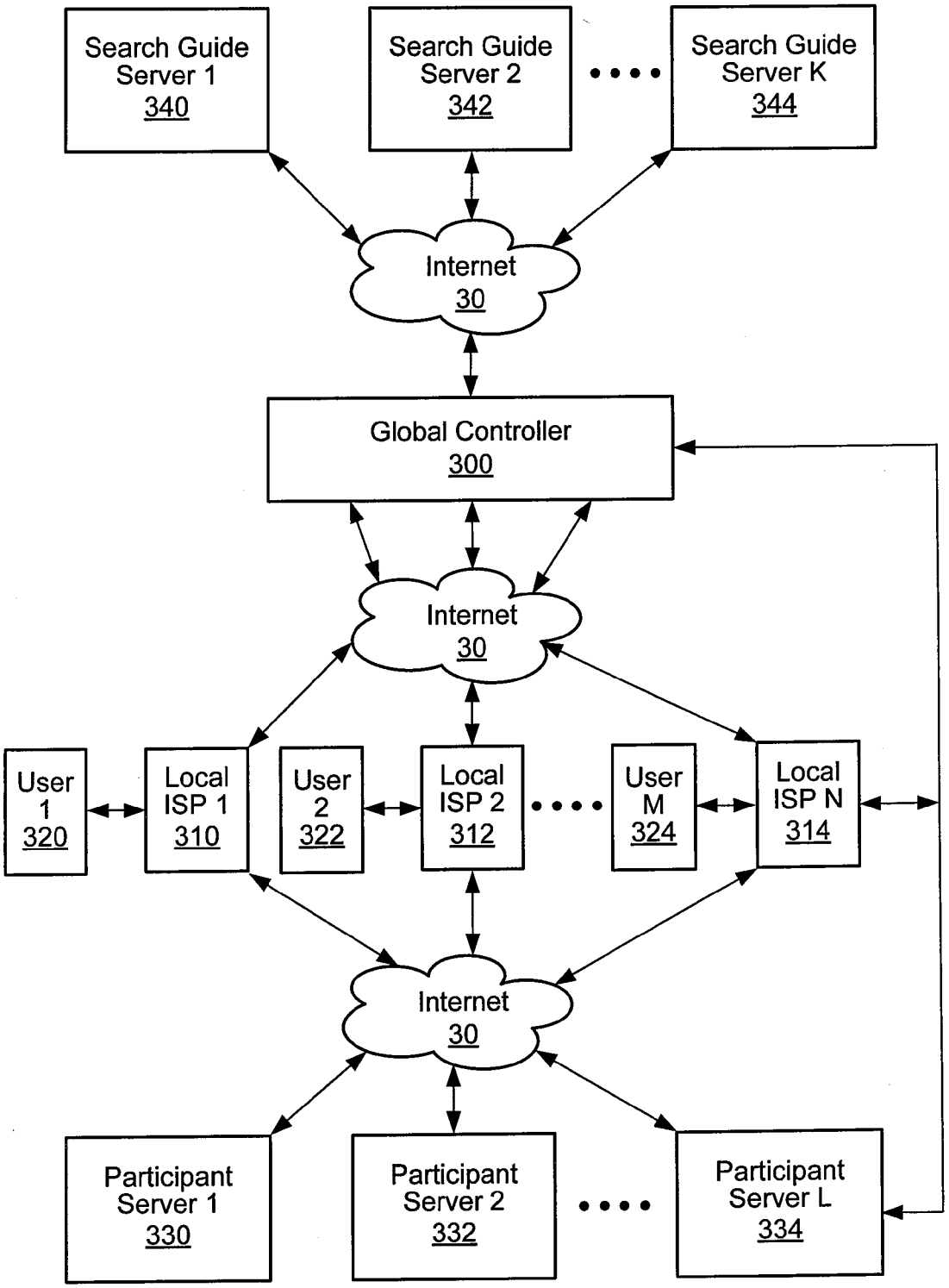
Search Guide Server 1 340
Search Guide Server 2 342
Search Guide Server K 344
Internet 30
Global Controller 300
Internet 30
User 1 320
Local ISP 1 310
User 2 322
Local ISP 2 312
User M 324
Local ISP N 314
Internet 30
Participant Server 1 330
Participant Server 2 332
Participant Server L 334

Fig. 4

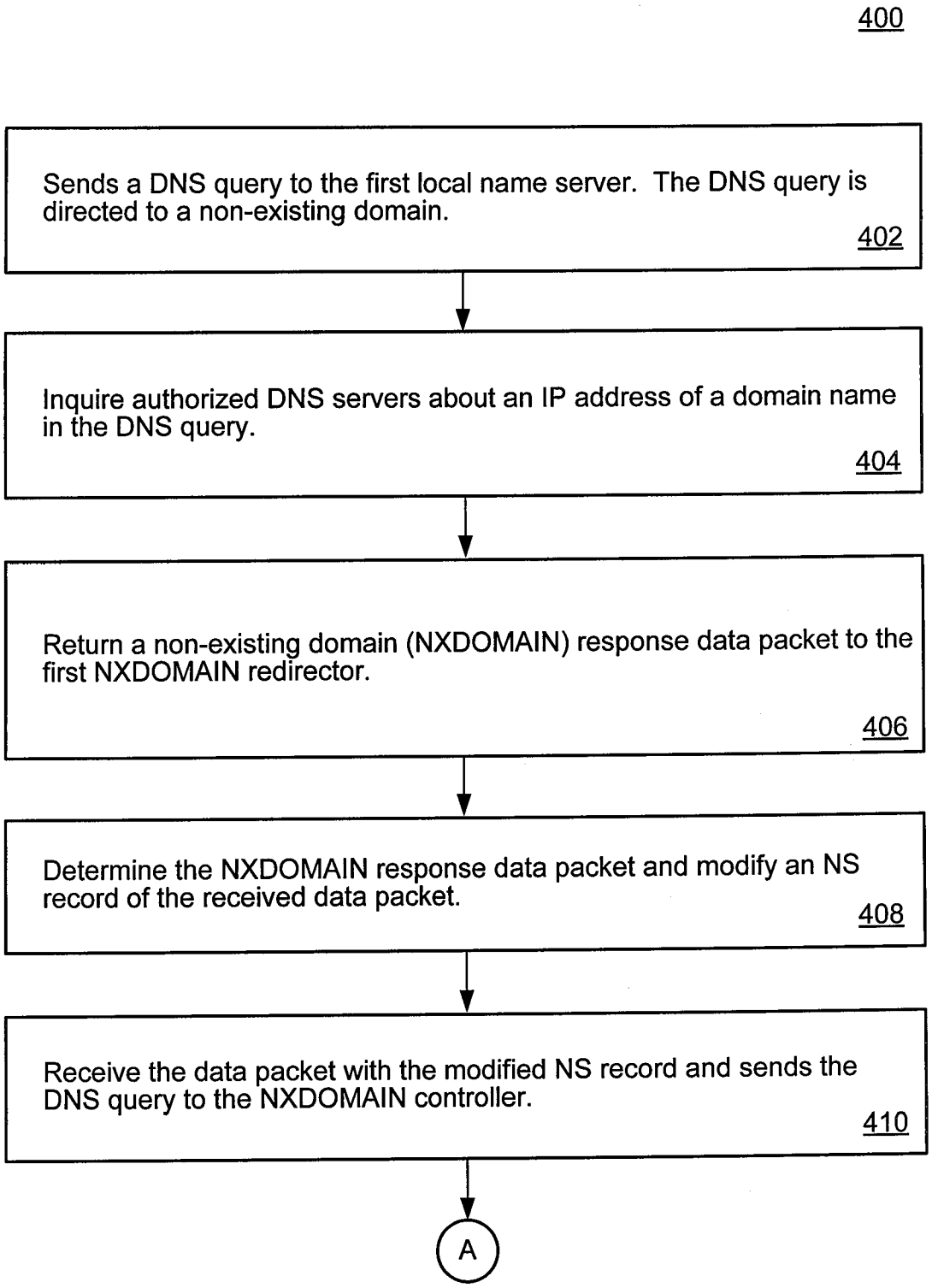
400
Sends a DNS query to the first local name server. The DNS query is directed to a non-existing domain.
402
Inquire authorized DNS servers about an IP address of a domain name in the DNS query.
404
Return a non-existing domain (NXDOMAIN) response data packet to the first NXDOMAIN redirector.
406
Determine the NXDOMAIN response data packet and modify an NS record of the received data packet.
408
Receive the data packet with the modified NS record and sends the DNS query to the NXDOMAIN controller.
410
A

Fig. 5

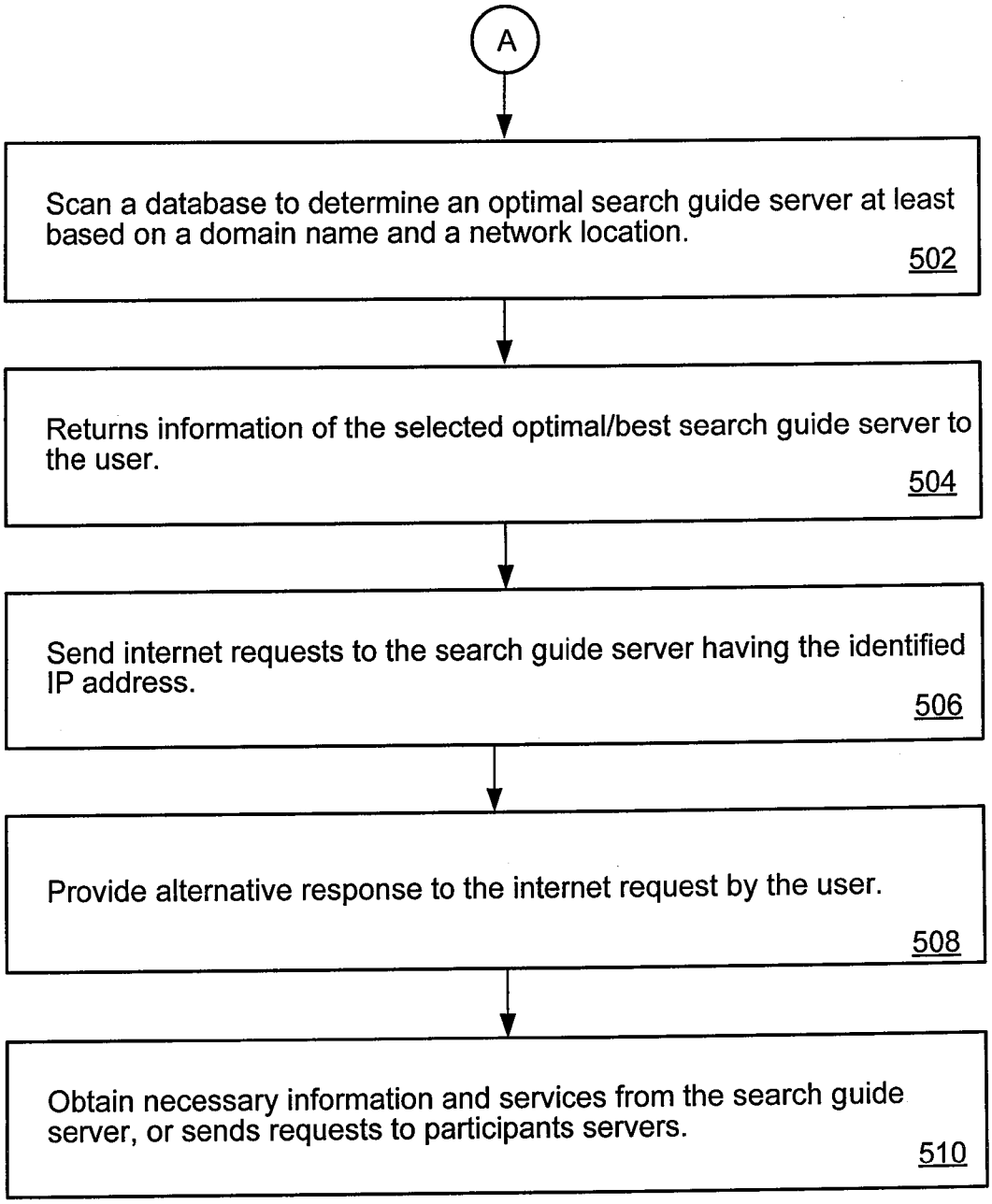
A
Scan a database to determine an optimal search guide server at least based on a domain name and a network location.
502
Returns information of the selected optimal/best search guide server to the user.
504
Send internet requests to the search guide server having the identified IP address.
506
Provide alternative response to the internet request by the user.
508
Obtain necessary information and services from the search guide server, or sends requests to participants servers.
510

Fig. 6

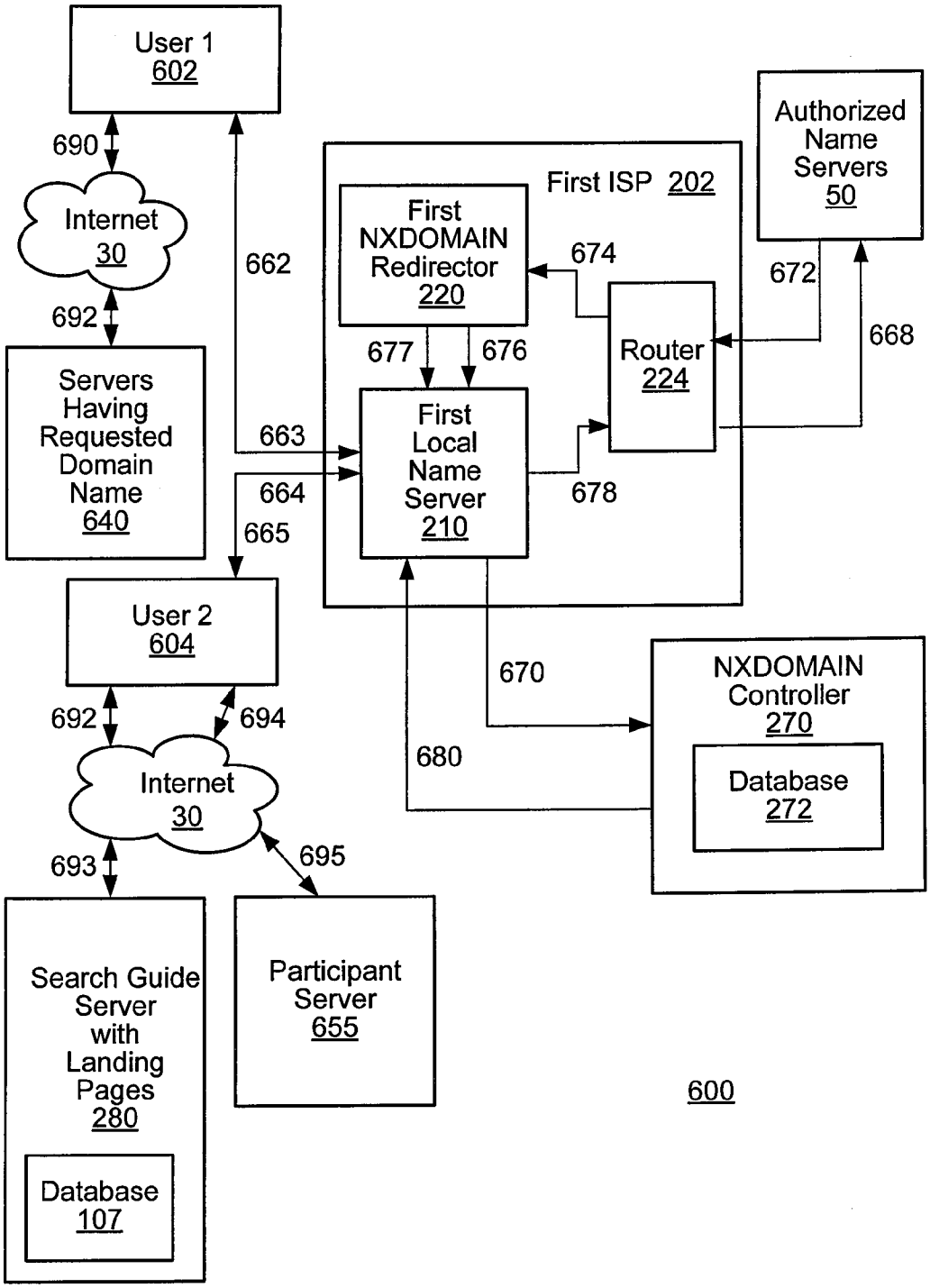
User 1
602
690
Internet
30
692
Servers Having Requested Domain Name
640
662
663
664
665
User 2
604
692
694
Internet
30
693
695
Search Guide Server with Landing Pages
280
Database
107
Participant Server
655
First ISP 202
First NXDOMAIN Redirector
220
674
677
676
Router
224
First Local Name Server
210
678
Authorized Name Servers
50
672
668
670
680
NXDOMAIN Controller
270
Database
272
600

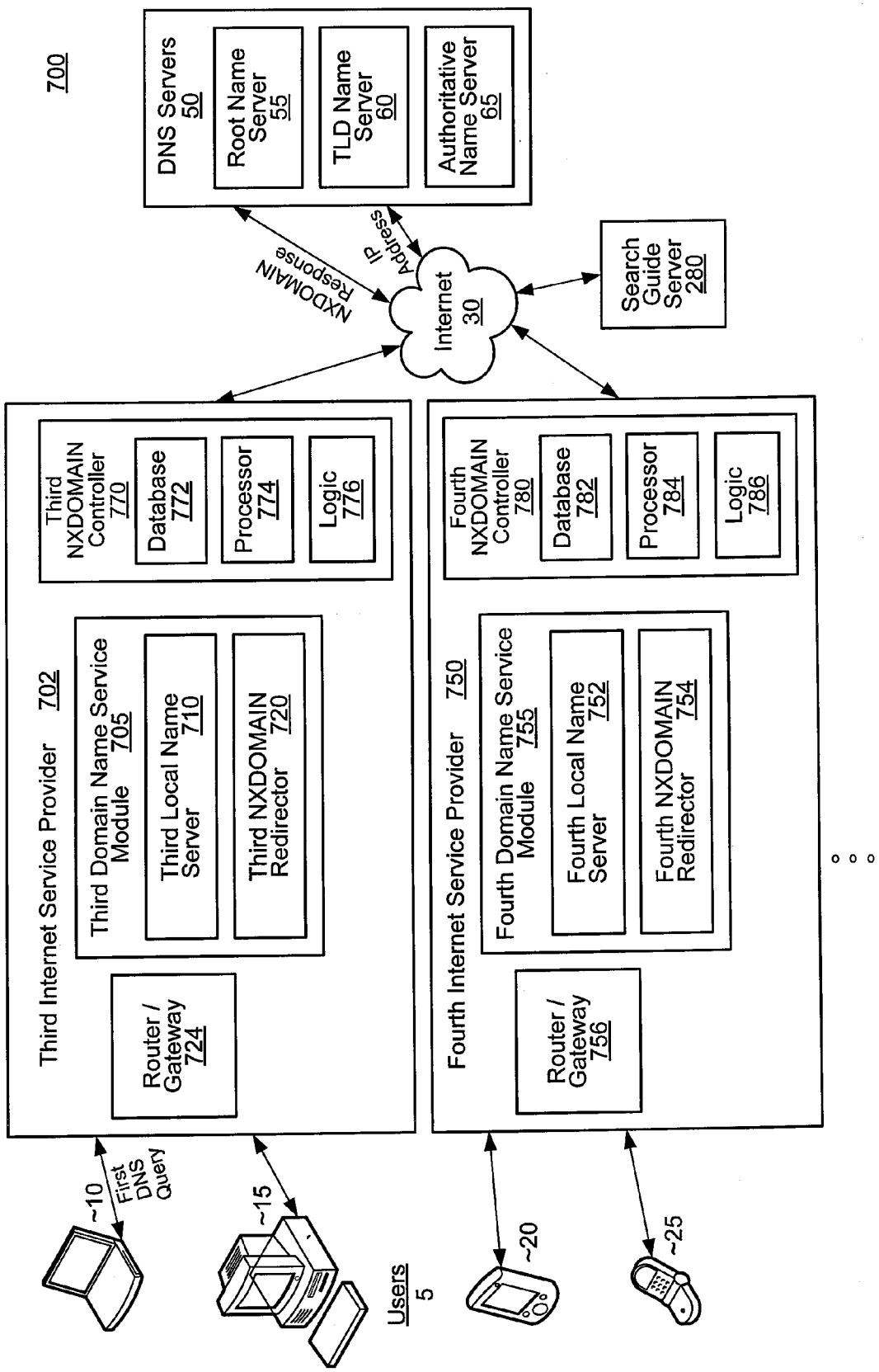
700
DNS Servers 50
Root Name Server 55
TLD Name Server 60
Authoritative Name Server 65
NXDOMAIN Response
IP Address
Internet 30
Search Guide Server 280
Third Internet Service Provider 702
Third NXDOMAIN Controller 770
Database 772
Processor 774
Logic 776
Third Domain Name Service Module 705
Third Local Name Server 710
Third NXDOMAIN Redirector 720
Router / Gateway 724
Fourth Internet Service Provider 750
Fourth NXDOMAIN Controller 780
Database 782
Processor 784
Logic 786
Fourth Domain Name Service Module 755
Fourth Local Name Server 752
Fourth NXDOMAIN Redirector 754
Router / Gateway 756
First DNS Query
~10
~15
~20
~25
Users 5

Fig. 7

Fig. 8

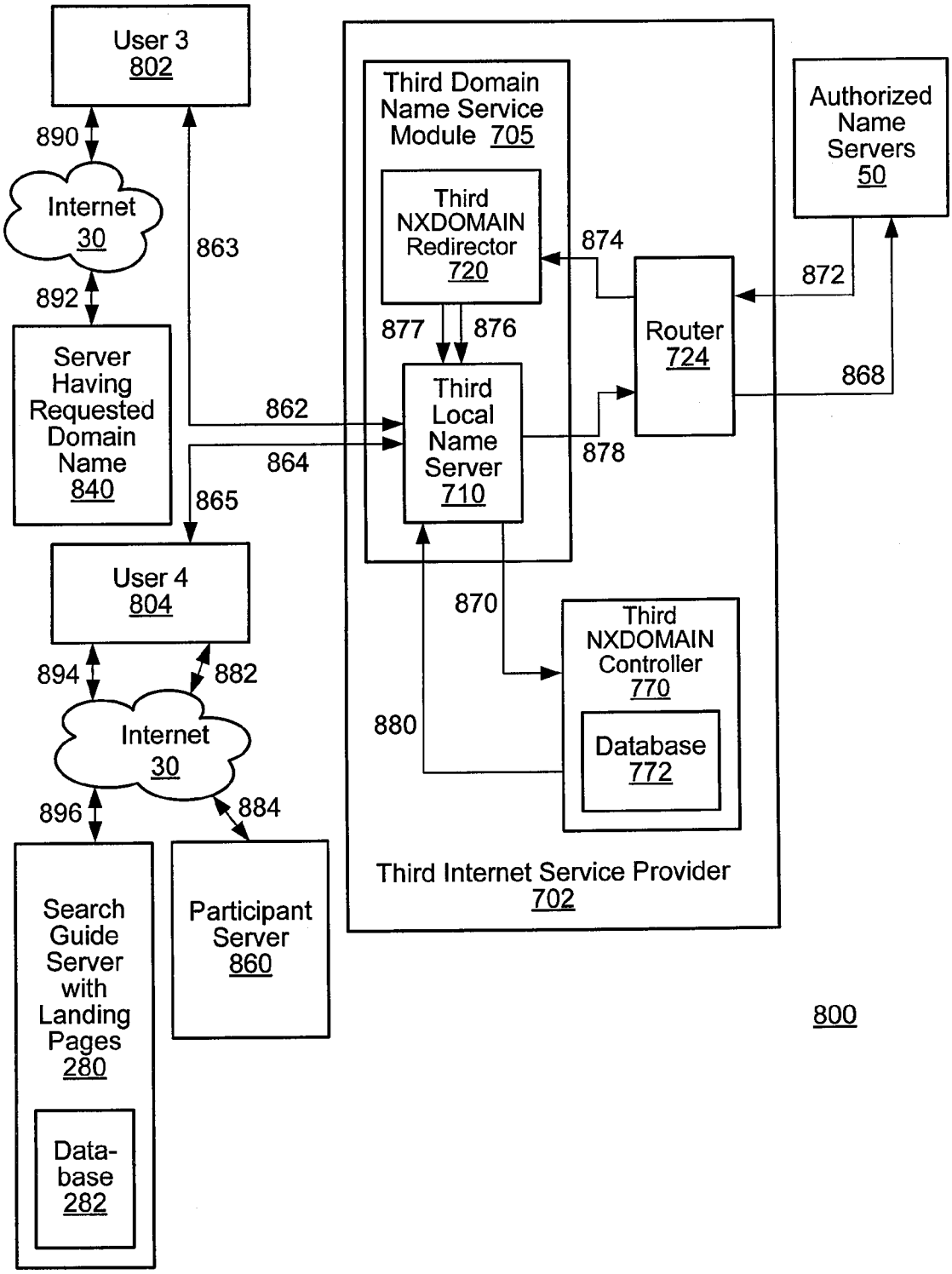
User 3
802
890
Internet
30
892
Server Having Requested Domain Name
840
863
862
864
865
User 4
804
894
882
Internet
30
896
884
Search Guide Server with Landing Pages
280
Data-base
282
Participant Server
860
Third Domain Name Service Module 705
Third NXDOMAIN Redirector
720
877
876
Third Local Name Server
710
874
Router
724
872
868
878
870
Third NXDOMAIN Controller
770
Database
772
880
Third Internet Service Provider
702
Authorized Name Servers
50
800

Fig. 9

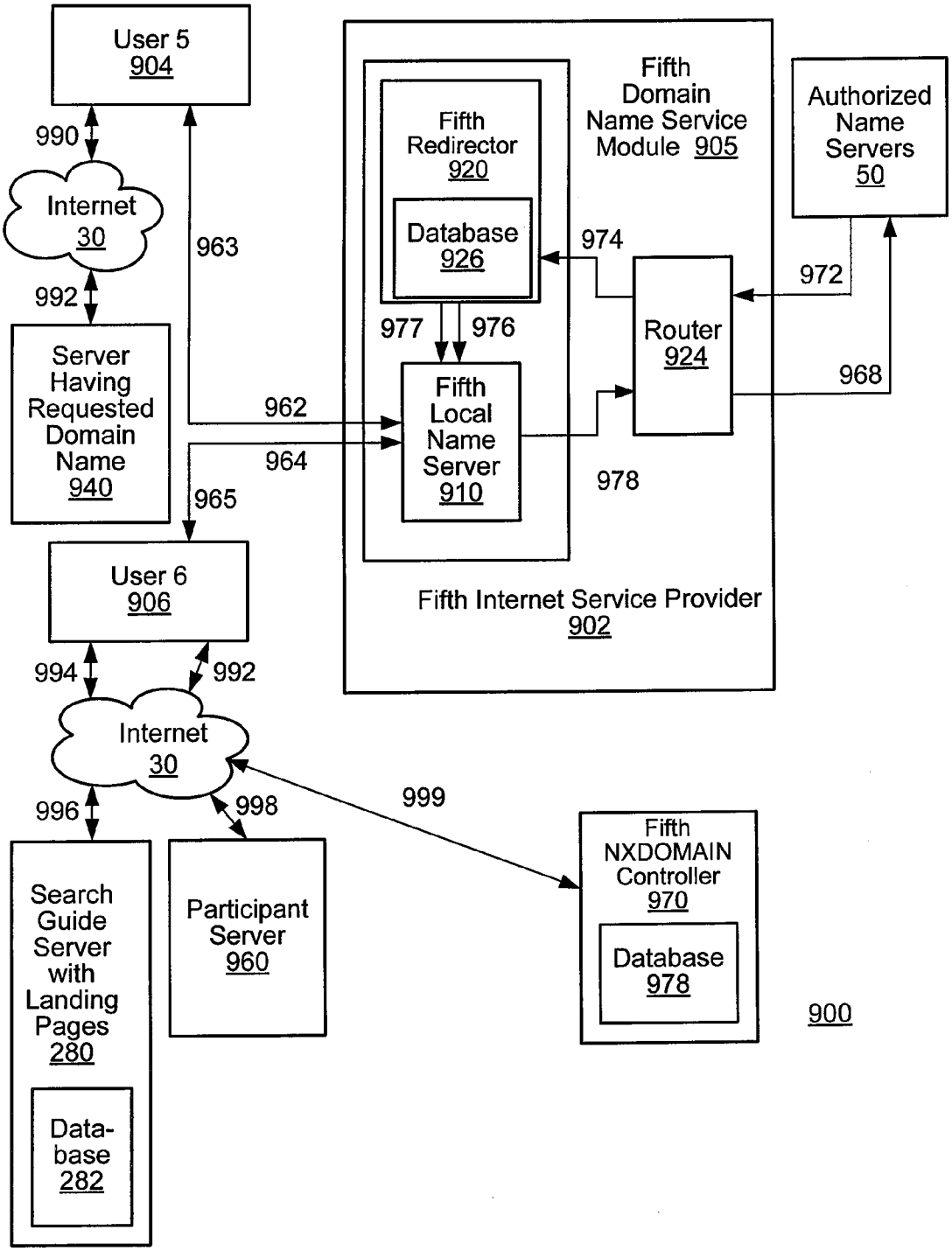
User 5
904
990
Internet
30
992
Server Having Requested Domain Name
940
963
962
964
965
User 6
906
994
992
Internet
30
996
998
999
Search Guide Server with Landing Pages
280
Data-base
282
Participant Server
960
Fifth Redirector
920
Database
926
Fifth Domain Name Service Module 905
974
977
976
Fifth Local Name Server
910
Router
924
972
968
978
Fifth Internet Service Provider
902
Authorized Name Servers
50
Fifth NXDOMAIN Controller
970
Database
978
900

Fig. 10

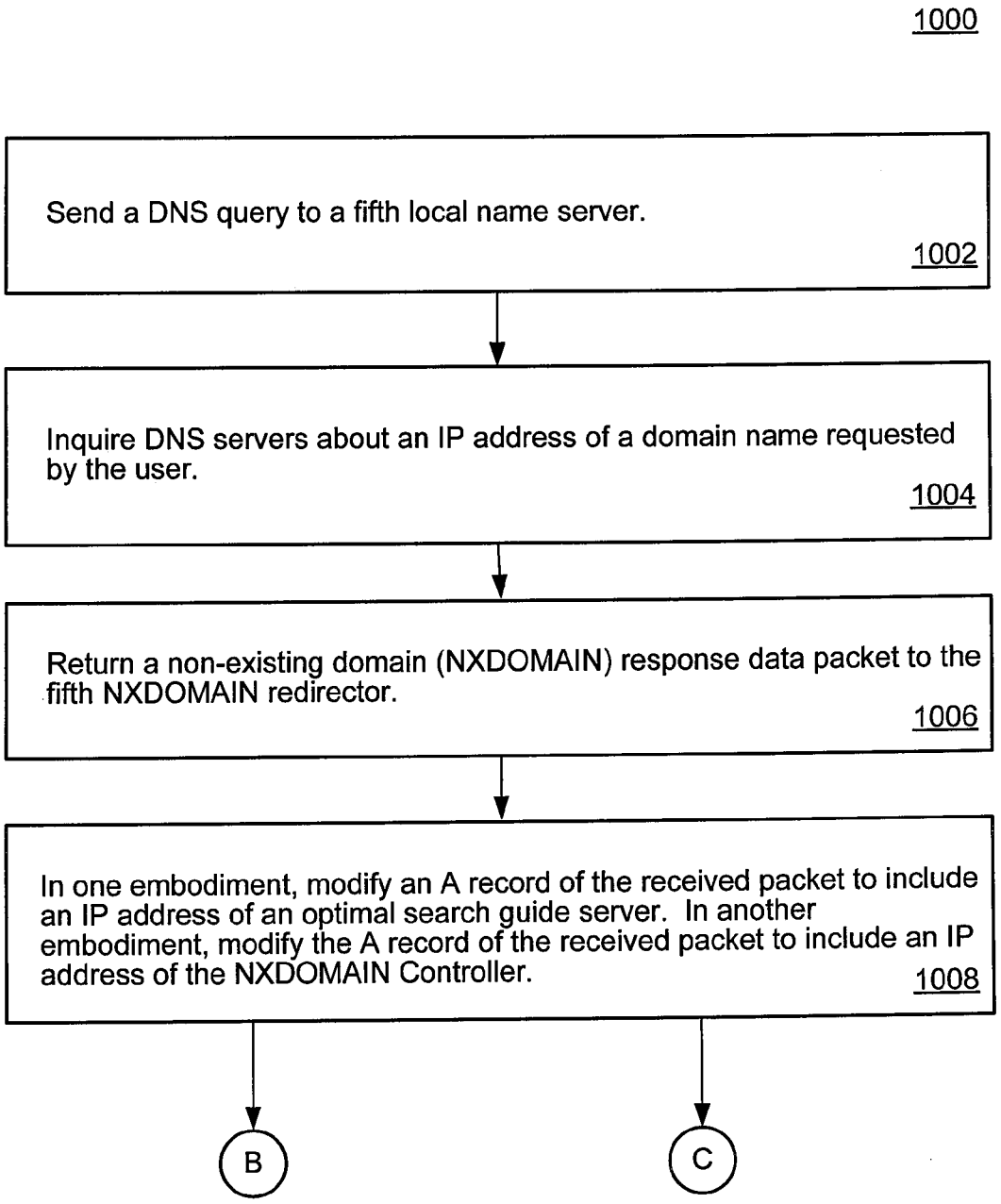
1000
Send a DNS query to a fifth local name server.
1002
Inquire DNS servers about an IP address of a domain name requested by the user.
1004
Return a non-existing domain (NXDOMAIN) response data packet to the fifth NXDOMAIN redirector.
1006
In one embodiment, modify an A record of the received packet to include an IP address of an optimal search guide server. In another embodiment, modify the A record of the received packet to include an IP address of the NXDOMAIN Controller.
1008
B
C

Fig. 11

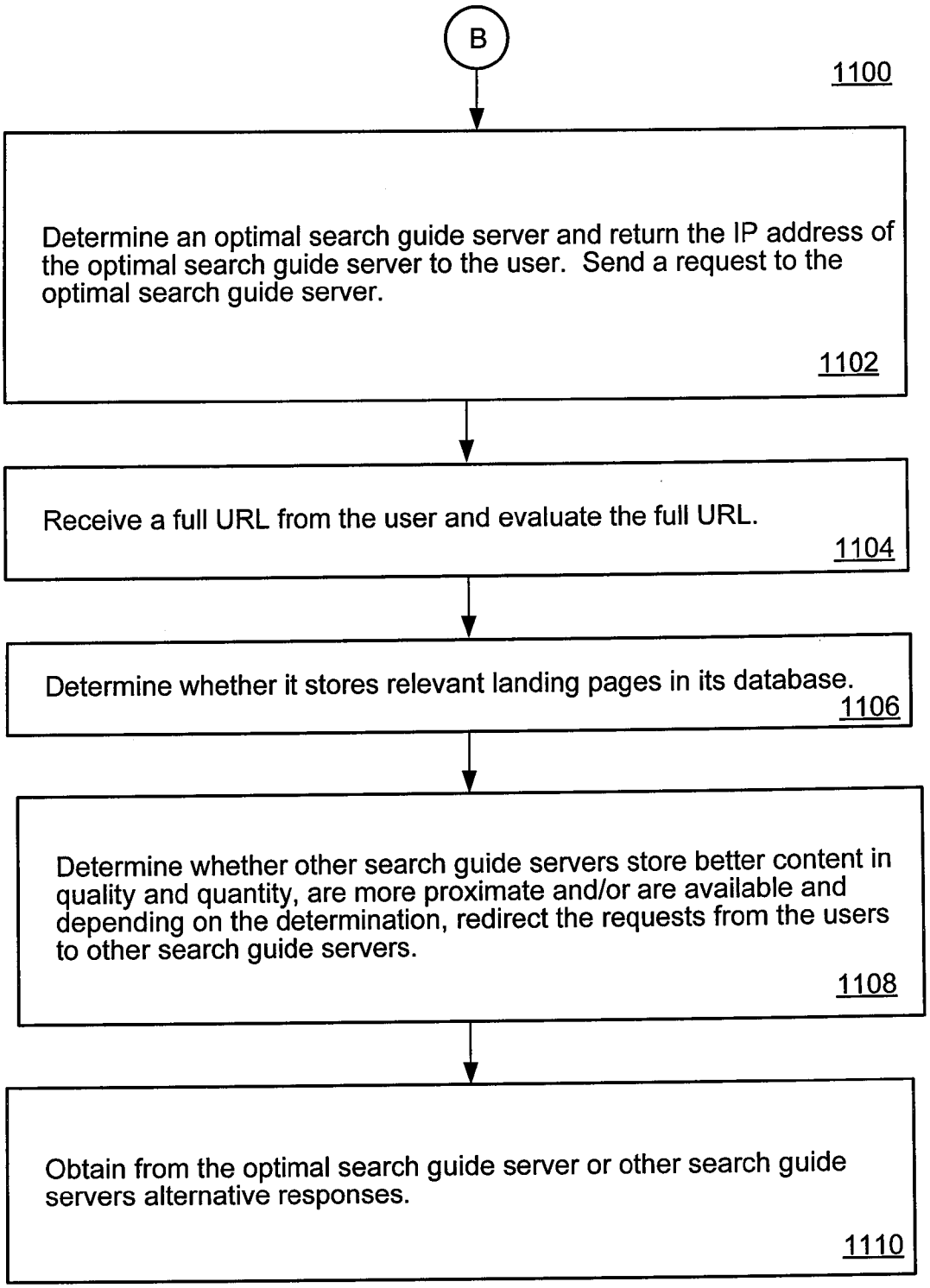
B
1100
Determine an optimal search guide server and return the IP address of the optimal search guide server to the user. Send a request to the optimal search guide server.
1102
Receive a full URL from the user and evaluate the full URL.
1104
Determine whether it stores relevant landing pages in its database.
1106
Determine whether other search guide servers store better content in quality and quantity, are more proximate and/or are available and depending on the determination, redirect the requests from the users to other search guide servers.
1108
Obtain from the optimal search guide server or other search guide servers alternative responses.
1110

Fig. 12

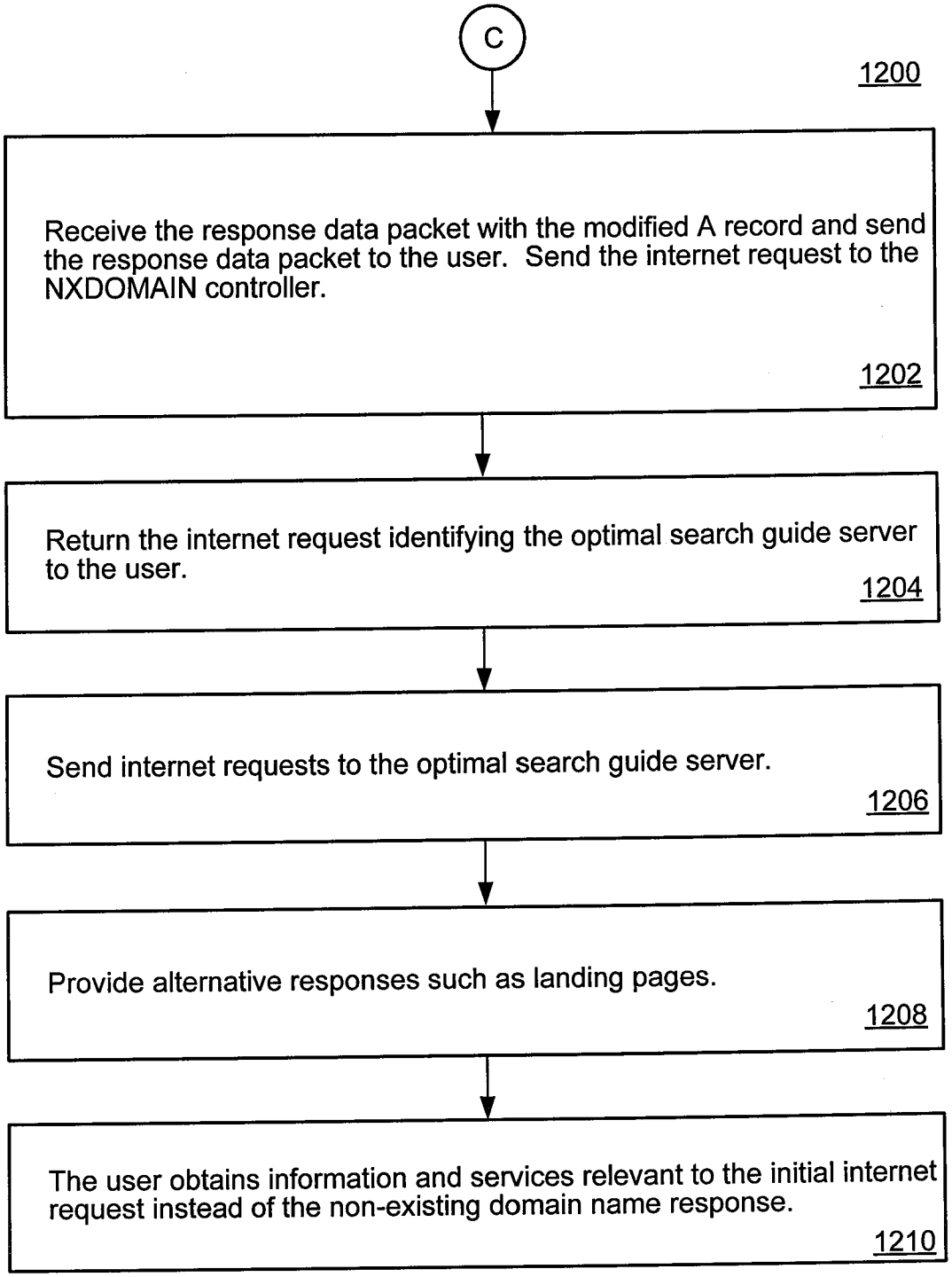
C
1200
Receive the response data packet with the modified A record and send the response data packet to the user. Send the internet request to the NXDOMAIN controller.
1202
Return the internet request identifying the optimal search guide server to the user.
1204
Send internet requests to the optimal search guide server.
1206
Provide alternative responses such as landing pages.
1208
The user obtains information and services relevant to the initial internet request instead of the non-existing domain name response.
1210

SYSTEM AND METHOD FOR CONTROLLING NON-EXISTING DOMAIN TRAFFIC

BACKGROUND

[0001] 1. Technical Field

[0002] This invention relates to an internet traffic control system and method and more particularly, to a system and method for controlling internet traffic directed to a non-existing domain.

[0003] 2. Related Art

[0004] Users identify desired internet destinations with domain names composed of a series of alpha-numeric characters. Servers, which provide information and services requested by users, are identified with an internet protocol ("IP") address composed of a series of numbers. In order for requests of users to reach servers, the requested domain names should be resolved to the IP address. A local internet service provider ("ISP") provides a local domain name resolution server which is dedicated to the domain name resolution process. The local domain name server is designated and operated by the local internet service provider. The local name server communicates with various authorized domain name resolution servers such as a root name server, a top-level domain ("TLD") name server, an authoritative name server, etc. Authorized domain name resolution servers may store "authoritative" IP addresses mapped to requested domain names.

[0005] A particular domain name requested by users may not exist. As one example, users may mistype or misspell domain names upon request. Users also may remember incorrect domain names. Authorized domain name resolution servers do not store IP addresses of non-existing domains in their database and return a non-existing domain response to users through the local domain name server. Users may obtain the non-existing domain response, for example, a simple error message indicating that the requested domain does not exist. This can be frustrating and confusing to the user who does not understand the nature of the error. Accordingly, there is a need to provide an improved system and method for controlling the non-existing domain request.

SUMMARY OF THE INVENTION

[0006] Only by way of example, a system and method for controlling internet traffic controls internet traffic directed to a non-existing domain in a centralized manner. Instead of a non-existing domain response, the user may receive an alternative response such as information relating to a landing page including useful information and resourceful suggestions under the control of a global controller. The global controller resides at a network location preferably independent of local internet service providers (ISPs). The centralized control over the user's request may be implemented by redirecting a domain name service (DNS) query to the global controller at an individual ISP level. Redirection of the DNS query may involve a record modification of the non-existing domain response.

[0007] In one embodiment, an internet traffic control method for a non-existing domain includes installing a DNS module, receiving a DNS query directed to the non-existing domain at the DNS module, redirecting to a controller the DNS query by the DNS module, receiving at the central controller the DNS query directed to the non-existing domain, determining an optimal search guide server operable to provide an alternative response to a non-existing domain request, sending the IP address of the optimal search guide server to a user application, and forwarding the IP address of the optimal search guide server to a user application which has sent the DNS query. The user application may be directed to access the optimal search guide server.

[0008] In another embodiment, an internet traffic control system for a non-existing domain includes a DNS module and a non-existing domain name controller. The DNS module is operable to redirect a DNS query for the non-existing domain and includes a redirector operable to modify a name server record of a domain name response data packet to the DNS query and indicative of the non-existing domain. The non-existing domain name controller is operable to receive the redirected DNS query and determine an optimal search guide server that provides an alternative response to a non-existing domain request informing a user application of the non-existing domain.

[0009] In yet another embodiment, an internet traffic control method for a non-existing domain includes operating a local name server to receive a DNS query from a user application comprising a browser. The DNS query includes a first DNS query directed to an existing domain and a second DNS query directed to the non-existing domain. The method also includes communicating with an authorized name server to resolve the first and the second DNS queries and receiving a DNS response from the authorized name server. The DNS response includes a first DNS response directed to the existing domain and a second DNS response directed to the non-existing domain. The method further includes modifying a record of the second DNS response, forwarding the first DNS response to the local name server without modification of the record, receiving the first and the second DNS responses at the local name server, determining at the non-existing domain name controller a search guide server operable to provide an alternative response to the user application which has sent the second DNS query, and returning a resultant IP address of the search guide server to the user application.

[0010] In yet another embodiment, an internet traffic control system for a non-existing domain includes means for receiving and processing a DNS query from a user application, means for redirecting the DNS query by modifying a predetermined record of the DNS response data packet to the DNS query, means for redirecting operable to determine that the DNS response data packet indicates the non-existing domain prior to the modification of the predetermined record, and means for controlling internet traffic directed to the non-existing domain by responding to a redirected DNS query, means for controlling operable to determine an optimal search guide server which provides an alternative response to the user application which has sent the redirected DNS query. The means for controlling further transmits an IP address of the optimal search guide server to the user application.

[0011] The means for controlling includes means for storing content information stored in a group of search guide servers, a network location of the group of the search guide servers, and predetermined criteria for defining the optimal search guide server at least based on the content information and the network location of the group of the search guide server. The means for controlling further includes a logic having an input of a domain name of the redirected DNS query and network location information of the user application and an output of a resultant search guide server. The logic

is operable to generate the output based on the predetermined criteria. The logic is further operable to integrate in real time the content information and the network location of the group of search guide servers and update the predetermined criteria.

BRIEF DESCRIPTION OF THE DRAWINGS

[0012] The invention can be better understood with reference to the following drawings and description. The components in the figures are not necessarily to scale, emphasis instead being placed upon illustrating the principles of the invention. Moreover, in the figures, like referenced numerals designate corresponding parts throughout the different views.

[0013] FIG. **1** is a block diagram illustrating a domain name resolution system for use with an internet.

[0014] FIG. **2** is a block diagram illustrating one embodiment of a non-existing domain traffic control system.

[0015] FIG. **3** is a block diagram illustrating control structure of a global non-existing domain traffic control system.

[0016] FIGS. **4-5** are flow charts illustrating operations of the centralized non-existing domain traffic control system of FIG. **2**.

[0017] FIG. **6** is a block diagram illustrating signal flows of the centralized non-existing domain control of FIGS. **2** and **4-5**.

[0018] FIG. **7** is a block diagram illustrating another embodiment of the centralized non-existing domain traffic control system.

[0019] FIG. **8** is a block diagram illustrating signal flows of the centralized non-existing domain control of FIG. **7**.

[0020] FIG. **9** is a block diagram illustrating other embodiments of the non-existing domain traffic control system.

[0021] FIGS. **10-12** are flow charts illustrating operations of the non-existing domain traffic control system of FIG. **9**.

DETAILED DESCRIPTION OF THE PREFERRED EMBODIMENTS

[0022] FIG. **1** is a block diagram of a system illustrating one example of a domain name resolution system for use with an internet. Users **5** include any data processing system with communication ability, such as a laptop **10**, a desk top **15**, a personal digital assistant ("PDA") **20**, a mobile phone **25**, etc. The users **5** communicate with a network of computers across internet **30**. An internet service provider **70** provides the users **5** with an internet connection required for connecting to the internet **30**. Through the internet **30**, users engage in various services, such as e-mail, file transfer, and the World Wide Web ("WWW"). The users **5** transmit data by packet switching using an internet protocol ("IP") address.

[0023] The users **5** identify a computer or computers on the internet that contain the desired information and service by using a domain name. The domain name is represented as a part of a selected uniform resource locator. The users **5** are allowed to use alphanumeric addresses of the domain name instead of numerical IP addresses, thereby easily communicating with various websites. A local internet service provider ("ISP") **70** provides internet connections and required services to the users **5**. The local ISP **70** is equipped with a local domain name server **75** ("local name server") which handles a domain name resolution process. The local name server **75** may be under the control of the local ISP **70**. In FIG. **1**, one local ISP and the local name server **75** are illustrated only for convenience of discussion. One or more local ISPs and local name servers are available. Also, users **10**, **15**, **20** and **25** may or may not use the same local ISP.

[0024] The local name server **75** receives a request from the users **5** and initiates the domain name resolution process. Specifically, the local name server **75** operates to find a corresponding IP address of the incoming domain name. For instance, when the user **10** requests the domain name of www.example.com, the local name server **75** operates to find the corresponding IP address of a server which will respond to the client's request. The local name server **75** may communicate with at least one of authorized domain name resolution servers **50**, such as a root name server **55**, a top-level-domain ("TLD") name server **60**, an authoritative name server **65**, etc. The root name server **55** and the TLD name server **60** are defined and arranged by the internet's official global implementation of the domain name system. The authoritative name server **65** provides an authoritative answer to a domain name system ("DNS") query. The authoritative name server **65** is registered with the TLD name server **60**. By way of one example, a root name server **55** contains information of the TLD name server **60** for handling the .com zone of www.example.com. The TLD name server **60** contains information of the authoritative name server **65** which is registered to serve www.example.com. As a result of a DNS query, the local name server **75** receives information of the TLD name server **60** or the authoritative name server **65**. When the TLD name server **60** provides name server records (NS records) of the authoritative name server **65**, the local name server **75** obtains an IP address of the authoritative name server **65**. The local name server **75** sends a DNS query to the authorized name server **65**. As shown in FIG. **1**, the local name server **75** resolves the domain name of www.example.com, e.g., to an IP address and forwards the IP address to the users **10**.

[0025] FIG. **2** is a block diagram illustrating one embodiment of an internet traffic control system **200** for a non-existing domain. The users **5**, the internet **30** and the DNS servers **50** are described above in conjunction with FIG. **1**. In FIG. **2**, a first ISP **202** and a second ISP **250** provide the internet connection to the users **5**. More specifically, the first ISP **202** connects users **10** and **15** with the internet **30** and the second ISP **250** connects users **20** and **25** with the internet **30**. Only for explanation purposes, two ISPs **202** and **250** and their connections with the users **10**, **15**, **20** and **25** are described, but one of ordinary skill in the art would appreciate that more or less than two ISPs and various connections with multiple users are available.

[0026] The first ISP **202** includes a first local name server **210** and a first non-existing domain ("NXDOMAIN") redirector **220**. The first ISP **202** also includes a processor which controls any necessary operations of the first ISP **202** and storage for storing information required for the operations of the first ISP **202**. Likewise, the second ISP **250** includes a second local name server **252** and a second NXDOMAIN redirector **254**. In other embodiments, the first and/or the second local name servers **210** and **252** may reside and operate independently of the first and/or the second ISPs **202** and **250**. The second ISP **250** also includes storage and a processor as discussed in connection with the first ISP **202**. The first ISP **202** and the second ISP **250** include a router/gateway **224** and **256**, respectively. Detailed explanations on other structural elements of the first ISP **202** and the second ISP **250** are limited to the extent that is needed for description of the present invention.

[0027] In FIG. **2**, a NXDOMAIN controller **270** is present at a network location independent of locations of the first ISP **202** and the second ISP **250**. Alternatively, the NXDOMAIN controller **270** may be consolidated into the first ISP **200** or the second ISP **250**, as will be described in detail in conjunction with FIG. **7** later. The NXDOMAIN controller **270** may include one or more servers that implement individual assigned functions and services. The NXDOMAIN controller **270** includes a database **272**, a processor **274** and logic **276**. The database **272** stores various information required for operation of the NXDOMAIN controller **270**, which will be described later. The processor **274** operates to control the database **272** and the logic **276**. The logic **276** performs selected functions, e.g., how to determine an optimal search guide server. As an input, the logic **276** may obtain IP addresses of the first and the second local name servers **210** and **252** and a domain name queried by the users **5**. As an output, the logic **276** may generate information of the optimal search guide server. To perform the selected functions, the logic **276** operates to determine a network distance between the optimal search guide server and the users **5**. The logic **276** further operates to determine whether the optimal search guide server stores information relevant to the domain name queried by the users **5**. For instance, when a domain name is tttoyplace.com, the logic **276** may determine that the users **5** are interested in toys and locates the optimal search guide server having toy information.

[0028] The NXDOMAIN controller **270** operates cooperatively with the first ISP **202** and the second ISP **250**. The NXDOMAIN controller **270** may be in communication with the first ISP **202** and/or the second ISP **250** and collects information relating to how to handle non-existing domain requests. In one example, a business entity that operates the NXDOMAIN controller **270** may have a contractual arrangement with the first ISP **202** and/or the second ISP **250**. In another example, the business entity that operates the NXDOMAIN controller **270** may coincide with the first ISP **202**, the second ISP **250**, or both. The NXDOMAIN controller **270** may store in the database **272** detailed information as to how to handle the non-existing domain requests received at the first ISP **202** and the second ISP **250**. The NXDOMAIN controller **270** may store in the database **272** an IP address of a search guide server **280** which will provide landing pages to the users **5**. Landing pages include access to services and information that may correlate with and/or may be equivalent to the request initially sought by the users **5**. The landing pages also may provide useful search results, advertisements, etc. Such alternative services and information may be offered on the landing pages by participant servers. The participant servers engage in advertising their services and information through contractual arrangement with the first and the second ISPs **202** and **250**, the NXDOMAIN controller **270**, or both.

[0029] The NXDOMAIN controller **270** also may store in the database **272** criteria that determine an optimal search guide server in response to the non-existing domain requests from the users **5**. The optimal search guide server indicates a best search guide server, for example, which stores relevant content that the users **5** are interested and which is located proximate to the users **5** to provide alternative responses to the non-existing domain request. As one example, the NXDOMAIN controller **270** may store a network location of the search guide server **280**, availability of the search guide server **280**, content stored in the search guide server **280**, etc. Thus, the NXDOMAIN controller **270** may determine whether the search guide server **280** stores the relevant content and is available and proximate to the users **5**, and select the search guide server **280** as the optimal search guide server. The NXDOMAIN controller **270** can be constructed out of any suitable hardware and software. Alternatively or additionally, the NXDOMAIN controller **270** may be constructed with special hardware and/or software if needed.

[0030] The search guide server **280** stores the landing pages for providing useful information and services. FIG. **2** shows one search guide server **280**, but two or more search guide servers **280** may be distributed throughout the network. The search guide server **280** may be implemented with a web server and process web requests from the users **5**. The search guide server **280** may receive a Hypertext Transfer Protocol (HTTP) request, but the search guide server **280** may receive and process requests in different protocols. Preferably, the search guide server **280** may be located proximate to the users **5**, thereby to improve a response speed.

[0031] Upon receipt of requests from the users **5**, the search guide server **280** may respond and return to the users **5** landing pages, e.g., including multiple hyperlinks to the participant servers, useful information and search suggestions relevant to the initial non-existing domain. In another embodiment, the search guide server **280** may redirect the requests from the users **5** to other search guide servers when the redirection serves better the requests by the users **5**. For instance, the search guide server **280** may find other search guide servers having more relevant content. Namely, the search guide server **280** may refine suggestions or guidance by redirecting the requests to other search guide servers. The refinement performed at the search guide sever level may improve accuracy of the landing pages and maximize use of the landing pages, which may increase revenue. In addition, a level of user satisfaction may improve.

[0032] In the first ISP **202** and the second ISP **250**, the network address translation (NAT) technique may be set up at the router or gateway **224** and **256**. More specifically, the router or gateway **224** and **256** may be set up to direct all of the domain name response packets to the first and the second NXDOMAIN redirector **220** and **254**. Alternatively, the NAT setup may be made at the local name servers **210** and **252**.

[0033] In FIG. **2**, the NXDOMAIN controller **270** may provide a centralized control over the non-existing domain requests from the first ISP **202** and the second ISP **250**. Preferably, the network location of the NXDOMAIN controller **270** is independent of that of the first and the second ISPs **202** and **250**. The search guide server **280** may be controlled by the NXDOMAIN controller **270**. In response to the non-existing domain requests, the NXDOMAIN controller **270** guides the users **5** to the search guide server **280** operable to offer alternative responses which provide the best suggestions and guidance to the users **5**.

[0034] In FIG. **2**, the NXDOMAIN controller **270** operates with the first and the second ISPs **202** and **250**. In another embodiment, the non-existing domain request may be controlled on a global scale. FIG. **3** is a block diagram illustrating control structure of a global NXDOMAIN controller ("the global controller") **300**. In FIG. **3**, the global controller **300** cooperatively operates with a plurality of ISPs including Local ISP **1 310**, Local ISP **2 312** . . . Local ISP N **314**. As one example, the multiple ISPs **310**, **312** . . . **314** may subscribe to services offered by the global controller **300**. The global

controller **300** and the plurality of ISPs **310**, **312** . . . **314** may be operated by a single entity, or may have contractual arrangements among them.

[0035] The global controller **300** may control and communicate with multiple search guide servers **340**, **342**, **344** which are, respectively, a search guide server **1**, a search guide server **2** and a search guide server K. The multiple search guide servers store landing pages which contain suggestions and guidance to users. Multiple participant servers including Participant server **1** (**330**), Participant Server **2** (**332**) and Participant L (**334**) are actual servers which provide internet services to users. The multiple participant servers may advertise their services through the multiple ISPs and/or the global controller **300**, thereby to attract users to use their services and to invite users to use their services.

[0036] In FIG. **3**, users include a first user group **320**, a second user group **322** and an Mth user group **324**. The first Local ISP **310** provides the internet connection to the first user group **320**, the second Local ISP **312** provides the internet connection to the second user group **332** and the Nth Local ISP **314** provides the connection to the Mth user group **324**. The local ISP**1** **310** to local ISPN **314** sends one or more DNS queries directed to the non-existing domain to the global controller **300**. The global controller **300** provides information of search guide servers which are operable to supply alternative responses such as landing pages. The local ISP**1** **310**~local ISPN **314** receive the information of the search guide servers **340**, **342** . . . **344** from the global controller **300** and forward the information to user **1** **320**, user **2** **322**, user M **324**, etc. As a result, user **1** **320**, user **2** **322**, user M **324**, etc. may use the landing pages provided by the search guide servers **340**, **342** . . . **344**. Instead of relying on the landing pages, the users may send their requests to Participant Server **1**, Participant Server **2** and/or Participant Server N. As shown in FIG. **3**, requests of the user groups **320**, **322** and **324** are forwarded to the global controller **300** through the multiple local ISPs **310**, **312** and **314**. The global controller **300** globally, i.e., instead of locally, controls the internet traffic directed to the non-existing domains in a centralized manner rather than by individual control at the ISP level. More specifically, the global controller **300** directs the non-existing domain requests from the multiple user groups **320**, **322** and **324** to the multiple search guide servers **340**, **342** and **344** which are controlled by the global controller **300**. The global controller **300** may monitor and evaluate the multiple search guide servers **340**, **342** and **344** and coordinate their operations. Eventually, the non-existing domain requests by the multiple user groups **300**, **322** and **324** may take advantage of suggestions and/or guidance provided by the multiple search guide servers **340**, **342** and **344**.

[0037] As shown in FIG. **3**, the global controller **300** may take over the control performed at the level of the local IPS. At least for that reason, the global controller **300** may collect, update and refine search guide information available at the multiple search guide servers **340**, **342** and **344**. The global controller **300** may also implement high level logic to improve a frequency of usage of the landing pages. The high level logic may also evaluate and update a user preference by using statistical information, a user survey, history of user selections, etc. For instance, the global controller **300** may collect and store historical information with regard to the frequency of the user selection on the suggestions and/or guidance and complaints by the user. The global controller **300** may refine the suggestions and the guidance. The global controller **300** may update the database on a real time basis, thereby to quickly and accurately accommodate change in the user response.

[0038] Referring to FIG. **4**, operations of the internet traffic control system **200** in FIG. **2** are described in detail. FIG. **4** is a flow chart illustrating operations of the internet traffic control system **200** and one embodiment of an internet traffic control method **400**. In this embodiment, the user **10** sends a DNS query to the first ISP **202** and the first local name server **210** of the first ISP **202** receives the DNS query (block **402**). The DNS query is directed to a non-existing domain. For example, when the user **10** types a selected domain name in an URL section of an internet browser, the browser automatically send the DNS query to the first local name server **210** of the first ISP **202** which provides the internet connection. The first ISP **202** operates and controls the first local name server **210**. At block **404**, the first local name server **210** inquires authorized DNS servers **50** such as the root name server, the TLD name server and/or the authorized name server about an IP address of the DNS query by the user **10**.

[0039] The DNS servers **50** return a domain name resolution response to the first ISP **202** at block **406**. The domain name resolution response includes a data packet that indicates a non-existing domain. The data packet includes a predetermined value that indicates the non-existing domain in accordance with the internet data packet convention. The router/gateway **224** receives the data packet indicative of the non-existing domain at block **406**. The router/gateway **224** may be set up to forward the data packet to the first NXDOMAIN redirector **220**. The router/gateway **224** may be set up with the NAT technique, thereby to modify a destination address of the non-existing domain response data packet with that of the first NXDOMAIN redirector **220**.

[0040] At block **408**, the first NXDOMAIN redirector **220** receives the non-existing domain response and modifies a name server ("NS") record of the non-existing domain response. Specifically, the first NXDOMAIN redirector **220** adds an IP address of the NXDOMAIN controller **270** to an NS record section. On the other hand, the first NXDOMAIN redirector **220** forwards a data packet from the DNS servers **50** to the first local name server **210** without any modification when it is determined that the data packet indicates an existing domain name response.

[0041] Subsequent to modification to the NS record of the data packet, the first NXDOMAIN redirector **220** transmits the data packet to the first local name server **210**. At block **410**, the first local name server **210** receives the data packet with the IP address of the NXDOMAIN controller **270**. The first local name server **210** may consider the NXDOMAIN controller **270** as an authoritative name server and sends the DNS query to the NXDOMAIN controller **270** for the domain name resolution. In other words, based on the modified NS record, the first local name server **210** inquires the NXDOMAIN controller **270** about the DNS query as if the NXDOMAIN controller **270** is one of the authorized DNS servers **50** (block **410**).

[0042] As described in conjunction with block **408**, the first local name server **220** receives the domain name response for the existing domain request from the first NXDOMAIN redirector **220**. For instance, the first local name server **220** returns to the user **10** an IP address of the existing domain name which is contained in the domain name response from the DNS servers **50**. The user **10** receives the IP address and sends an internet request to a server having the returned IP

address. The user **10** receives a requested service and/or information from the server having the returned IP address.

[0043] Referring to FIG. **5**, operations of the NXDOMAIN controller **270** are further explained. FIG. **5** is a flow chart illustrating operations performed by the NXDOMAIN controller **270**. As described in conjunction with FIG. **4**, the NXDOMAIN controller **270** receives the DNS query from the first local name server **210** (block **410**). The NXDOMAIN controller **270** scans the database **272** to locate an IP address of an optimal search guide server. The optimal search guide server is operable to provide landing pages with the best suggestions and guidance as well as having a close proximity to the network location of the user **10**. In response to the domain name of the DNS query and the IP address of the first local name server **210**, the logic **276** determines relevant content initially sought by the user **10** and the network location (block **502**). For instance, the domain name of the DNS query may include a typographical error of an online toy store name. The logic **276** receives the misspelled domain name, evaluates the domain name and determines that the user **10** is interested in a toy. Based on the determination on the content, the NXDOMAIN controller **270** is able to determine which search guide servers may serve landing pages with the content that is relevant to a toy (block **502**). Furthermore, the NXDOMAIN controller **270** also determines the network proximity between the optimal search guide server and the user **10** and availability of the optimal search guide server (block **502**).

[0044] The NXDOMAIN controller **270** may monitor the search guide server **280** to determine the availability and current information stored in the search guides server **280**. Based on criteria specifying the optimal search guide server and the real-time monitoring information, the NXDOMAIN controller **270** is able to determine a best search guide server. In this embodiment, the best search guide server corresponds to the search guide server **280** only for convenience of explanation. The NXDOMAIN controller **270** returns information of the search guide server **280** such as the IP address of the search guide server **280** to the first local name server **210** (block **504**). The NXDOMAIN controller **270** operates in the same manner that an authoritative name server such as the authoritative name server **65** operates. In other words, the NXDOMAIN controller **270** stores in the database **272** the IP address mapped to the search guide server **280**. The first local name server **210** receives the domain name response from the NXDOMAIN controller **270** and forwards the response to the user **10** (block **504**). Upon receipt of the domain name response, the user **10** sends an internet request to the search guide server **280** at block **506**. The internet request includes, for example, an HTTP request that includes a full Universal Resource Locator ("URL") of the initial DNS query.

[0045] In this embodiment, the search guide server **280** may be a web server that processes a web request. The search guide server **280** may provide the user **10** with a web page that includes various suggestions and guidance based on the internet request by the user **10** (block **508**). Alternatively, or additionally, the search guide server **280** may redirect the request by the user **10** to another search guide server which may store more relevant content to the initial request by the user **10**. Namely, the search guide server **280** may refine a resultant landing page by redirecting the request by the user to another search guide server equipped with better content. As the search guide server **280** receives the full URL from the user **10**, the search guide server **280** is able to determine more relevant content of the initial internet request by the user **10**. For instance, while the NXDOMAIN controller **270** may determine that the initial internet request by the user **10** is related to toys based on the domain name, the search guide server **280** may determine that the initial DNS query is related to toy cars. At block **510**, the user **10** receives search guide web pages from the search guide server **280** or another search guide server. In one embodiment, the search guide web pages include various hyperlinks that direct the user **10** to participant servers operable to provide alternative services and/or information to the ones initially requested by the user **10** (block **510**). When the user **10** selects one of the hyperlinks, revenue may be generated for the operating entity of the NXDOMAIN controller **270** as well as the first ISP **202**. In another embodiment, the search guide web pages include information that the user **10** is initially searching, and the user **10** may obtain all of the information from the search guide web pages. In yet another embodiment, the search guide web pages include useful search guide and information, advertisements, etc. Revenue may generate solely based on the use of the search guide web pages.

[0046] Referring to FIG. **6**, signal flows of the internet traffic control system **200** are explained. FIG. **6** is a block diagram illustrating signal flows of the non-existing domain traffic control. In FIG. **6**, operations of the first ISP **202** are described only for convenience of explanation. FIG. **6** illustrates domain name resolution of both the non-existing domain request and an existing domain request. User **1 602** sends a first DNS query **663** to the first local name server **210** of the first ISP **202** (flow **663**). User **2 604** sends a second DNS query **664** to the first local name server **210** (flow **664**). The first local name server **210** receives the first and the second DNS queries **663** and **664** and asks authorized name servers **50** to resolve the first and the second DNS queries **663** and **664** through the router/gateway **224** (flows **678** and **668**). The authorized name servers **50** return a domain name resolution response **672** to the router/gateway **224**. The router **224** forwards the domain name resolution response **672** to the first NXDOMAIN redirector **220** (flow **674**). The first NXDOMAIN redirector **220** intercepts the domain name resolution response **672** (flow **674**) and the first local name server **210** may not directly receive the domain name resolution response (flow **674**).

[0047] The first NXDOMAIN redirector **220** determines whether the domain name resolution response **674** includes the non-existing domain response or an existing domain name response including a resolved IP address. Specifically, the first NXDOMAIN redirector **220** detects whether the domain name resolution response **674** includes a predetermined value indicating the non-existing domain response or the existing-domain response, e.g., including the resolved IP address. The first NXDOMAIN redirector **220** modifies an NS record of the non-existing domain response by adding information of the NXDOMAIN controller **270**. In this embodiment, the first DNS query **663** includes the existing domain request and the second DNS query **664** includes the non-existing domain request. The first NXDOMAIN redirector **220** forwards to the first local name server **210** a data packet of the existing domain name response to the first DNS query **663** (flow **676**). On the other hand, the first NXDOMAIN redirector **220** modifies a data packet of the non-existing domain response to the second DNS query **664** by changing the NS record of the data packet. The modified data packet **677** is forwarded to the first local name server **210** (flow **677**).

[0048] The first local name server **210** forwards to the user **1 602** a first domain name response including the data packet of the existing domain name response (flow **662**). The user **1 602** receives the first domain name response (flow **662**) and subsequently sends an internet request to a server **640** identified by the returned first domain name response (flow **690**). On the other hand, the first local name server **210** forwards to the NXDOMAIN controller **270** a DNS query based on a modified NS record when a second domain name response includes the data packet the non-existing domain response (flow **670**). The NXDOMAIN controller **270** receives the second DNS query including the modified NS record (flow **670**) and determines a best search guide server based on predetermined criteria and real time information of a search guide server status. The predetermined criteria may be defined at least by the domain name of the second DNS query. The predetermined criteria may be stored in the database **272** and the real time information may be collected by communicating with the first ISP **202** and other ISPs (not shown) across the internet.

[0049] The NXDOMAIN controller **270** sends the first local name server **210** the second domain name response to the second DNS query (flow **680**). The first local name server **210** provides the second domain name response including the IP address of the search guide server **280** to the user **2 604** (flow **665**). The user **2 604** sends an internet request such as an HTTP request to the search guide server **280** based on the returned first domain name response (flow **692**). The search guide server **280** provides a selected landing page with suggestions and guidance. As one example, the user **2 604** receives information and services provided by various domain names preferably including information and services provided by a correct domain name of the second DNS query (flows **692** and **693**). As another example, hyperlinks that contain information pertaining to the initial internet request by the user **2 604** may be provided on the landing page (flow **693**). The user **2 604** clicks one of the hyperlinks and sends the request to a participant server **655** selected by clicking on the hyperlink (flow **694**). The participant server **655** receives the request from the user **2 604** and provides the requested service and/or information (flow **695**).

[0050] As shown in FIG. **6**, the NXDOMAIN controller **270** operates to control the non-existing domain traffic received at the first local ISP **202**. The NXDOMAIN controller **270** may communicate with other local ISPs and be able to control the non-existing domain traffic. Accordingly, the non-existing domain traffic may be controlled in the centralized manner rather than an individual IPS level. The centralized control may facilitate more organized and uniform control over the non-existing domain traffic. For instance, the NXDOMAIN controller **270** may collect search guide server information from multiple local ISPs and integrate the server information in real time. Users may be directed to more available and resourceful alternatives instead of a simple error page with regard to the non-existing domain requests. Satisfaction level of users may increase, thereby resulting increase in revenue.

[0051] The centralized control over the non-existing domain traffic described above modifies the NS record and redirects the DNS query based on the modified NS record. This may allow the first and the second local name servers **210** and **252** to cache the domain name response from the NXDOMAIN controller **270**. In another embodiment, the local name servers **210** and **252** may or may not cache the domain name response. Caching at the first and the second local name servers **210** and **252** may improve the response speed and efficiency of the local ISPs. Additionally, caching at the local name server may be applicable to requests for a sub-level domain of the non-existing domain. For instance, a DNS query for aaa.eeexample.com, the domain is processed as a non-existing domain request and an NS record of a non-existing domain response is modified to be directed to the NXDOMAIN controller **270**, as described in conjunction with FIG. **6**. With regard to another DNS query for a sub-level domain of the non-existing domain, e.g., bbb.eeexample.com, the modified NS record of the domain, eeexample.com may be already cached. Thus, the DNS query for bbb.eeexample.com may be directly sent to the NXDOMAIN controller **270**, thereby to improve a response speed.

[0052] FIG. **7** is a block diagram illustrating another embodiment of an internet traffic control system **700** for a non-existing domain. The system **700** includes the users **5** including various users **10**, **15**, **20** and **25** and the DNS servers **50** which are described above in conjunction with FIG. **2**. The system **700** includes a third ISP **702** and a fourth ISP **750**. In this embodiment, the third ISP **702** provides the internet connection to the users **10** and **15**. The fourth ISP **750** provides the internet connection to the users **20** and **25**. The third ISP **702** includes a third domain name service module **705** which houses a third local name server **710** and a third NXDOMAIN redirector **720** and a router/gateway **724**. The third ISP **702** also includes a third NXDOMAIN controller **770**. Likewise, the fourth ISP **750** includes a fourth domain name service module **755** which houses a fourth local name server **752** and a fourth NXDOMAIN redirector **754** and a router/gateway **756**. Although not shown in FIG. **7**, each ISP includes processors, storage and any other hardware required for operation of the ISP.

[0053] In the third ISP **702** and the fourth ISP **750**, the third NXDOMAIN controller **770** and the fourth NXDOMAIN controller **780** may be under the control of the third ISP **720** and the fourth ISP **750**, respectively. The domain name service modules **705** and **755** may integrate the third and the fourth local name servers **710** and **752** with the third and the fourth NXDOMAIN redirectors **720** and **754**, respectively. Accordingly, the third and fourth domain name server modules **705** and **755** operate to receive a domain name response data packet and modify a selected record of the data packet if needed. The NXDOMAIN controllers **770** and **780** may be assigned to the third ISP **702** and the fourth ISP **750**, respectively. Alternatively, or additionally, the NXDOMAIN controllers **770** and **780** may control the non-existing domain requests incoming from other ISPs having no assigned NXDOMAIN controller. In that case, the NXDOMAIN controllers **770** and **780** may perform a centralized control over the non-existing domain request from other ISPs, although the NXDOMAIN controllers **770** and **780** locally reside in the third and the fourth ISPs **720** and **750**.

[0054] Referring to FIG. **8**, signal flows and operations of the internet traffic control system **700** are explained in detail. FIG. **8** is a block diagram illustrating signal flows of the non-existing domain traffic control of the system **700** in FIG. **7**. In FIG. **8**, operations of the third ISP **702** are described only for convenience of discussion. A user **3 802** sends a third DNS query **862** to the third ISP **702**. The third domain name service module **705** receives the third DNS query **862**. As a result, the third local name server **710** receives the third DNS query **862** and inquires the authorized name servers **50** through the

router **724** (flows **868** and **878**). The authorized name servers **50** return a data packet of a domain name response (flow **872**) to the router **724** which in turn forwards the data packet to the third domain name service module **705**. The third NXDOMAIN redirector **720** receives the data packet (flow **874**). The third NXDOMAIN redirector **720** determines that the data packet indicates an existing domain name response such as a resolved IP address. The third NXDOMAIN redirector **720** passes the data packet having the existing domain name response to the third local name server **710** (flow **876**), which forwards the data packet to the user **3 802** (flow **863**). The user **3 802** sends an internet request to a server **840** identified by the returned data packet (flow **890**) through the third internet service provider **702**. The server **840** will respond to the internet request from the user **3 802** (flow **892**).

[0055] A user **4 804** sends a fourth DNS query (flow **864**) requesting a resolution of a non-existing domain. The third domain name service module **705** receives the fourth DNS query (flow **864**) and the third local name server **710** sends the fourth DNS query to the authorized name servers **50** through the router **724** (flows **868** and **878**). The authorized name servers **50** returns a data packet indicating the non-existing domain to the third domain name service module **705** through the router **724** (flows **872** and **874**). The third NXDOMAIN redirector **720** receives the data packet (flow **874**). The third NXDOMAIN redirector **720** determines that the data packet indicates the non-existing domain response. The third NXDOMAIN redirector **720** modifies the data packet such that the third local name server **710** inquires the NXDOMAIN controller **770** about information of the search guide server **280** such as the IP address. The third NXDOMAIN redirector **720** forwards the modified data packet to the third local name server **710** (flow **877**), which sends the fourth DNS query to the NXDOMAIN controller **770** (flow **870**).

[0056] The NXDOMAIN controller **770** receives the fourth DNS query (flow **870**) and determines a best search guide server which is operable to provide a landing page. The NXDOMAIN controller **770** may be aware of the content of the initial domain name request by the user **4 804** based on an input of the initial domain name of the fourth DNS query. The NXDOMAIN controller **770** also may determine network proximity of available search guide servers to the user **4 804**. The NXDOMAIN controller **770** returns information of the best search guide server **280** such as an IP address to the third local name server **710** (flow **880**), which in turns returns the information to the user **4 804** (flow **865**). The user **4 804** sends an internet request to the search guide server **280** based on the returned information of the search guide server **280** (flow **894**) and the search guide server **280** provides a selected landing page (flow **896**). The user **4 804** subsequently reviews and/or selects information and services on the selected landing page (flow **882**). Alternatively, or additionally, a participant server corresponding to the selected information responds to the request from the user **4 804** (flow **884**).

[0057] In this embodiment, the NXDOMAIN controller **770** operates with and is controlled by the local ISP such as the third ISP **702**. The non-existing domain request may be internally processed by the residing NXDOMAIN controller **770** and the response speed may improve. The NXDOMAIN controller **770** may collect more accurate and relevant information for the network location in which the local ISP serves. Accordingly, user satisfaction level may improve when the user finds accurate suggestions and guidance by the landing page. In addition, the third local name server **710** of the local ISP may cache the domain name response which may further enable efficient and speedy response. In another embodiment, the third local name server **710** may or may not cache the domain name response. Additionally, the NXDOMAIN controller **770** may serve as the assigned NXDOMAIN controller for the local ISP and an independent controller for other ISPs having no assigned NXDOMAIN controller, as shown in FIGS. **2-3**, for example. Thus, the NXDOMAIN controller **770** may control the non-existing domain traffic locally and globally.

[0058] FIG. **9** is a block diagram illustrating another embodiment of an internet traffic control system **900** directed to the non-existing domain name and signal flows of the internet traffic. The internet traffic control system **900** includes a fifth ISP **902** and a fifth NXDOMAIN controller **970**. The fifth ISP **902** includes a fifth domain name service module **905** and a router **924**. The fifth domain name service module **905** includes a fifth local name server **910** and a fifth NXDOMAIN redirector **920** having a database **926**. In this embodiment, the database **926** may store information of the search guide server **280** with landing pages.

[0059] A user **5 904** sends a DNS query to the fifth ISP **902** (flow **962**). At the fifth domain name service module **905** receives the DNS query and the fifth local name server **910** sends the DNS query to the authorized name servers **50** through the router **924** (flows **968** and **978**). The authorized name server **50** returns a response data packet indicating an existing domain name response to the fifth domain name service module **905** through the router **924** (flows **972** and **974**). The fifth local name server **910** receives the response data packet of the existing domain name response from the fifth NXDOMAIN redirector **920** (flow **976**) and returns the response data packet to the user **1 802** (flow **963**).

[0060] On the other hand, a user **6 906** sends another DNS query to the fifth ISP **906** (flow **964**). Another DNS query is directed to a non-existing domain. Referring to FIG. **10**, processing of another DNS query directed to the non-existing domain is further explained. The fifth DNS module **905** receives the DNS query (flow **964**) at block **1002** and the fifth local name server **910** sends the DNS query to the authorized name servers **50** through the router **924** (flows **968** and **978**) at block **1004**. The authorize name server **50** returns a response data packet indicating the non-existing domain response to the fifth DNS module **905** through the router **924** (flows **972** and **974**) at block **1006**. The fifth NXDOMAIN redirector **920** receives the response data packet and determines that the response data packet corresponds to the non-existing domain response at block **1006**. In this embodiment, an A record of the response data packet is modified at block **1008**. In the previously described embodiments, the NS record of the response data packet is modified. In one embodiment, the A record of the response data packet may be modified to include an IP address of an optimal search guide server (block **1008**). In another embodiment, the A record of the response data packet may be modified to include an IP address of the NXDOMAIN controller **970** (block **1008**).

[0061] Referring to FIGS. **11-12**, operations of the internet traffic control system for modifying the A record are explained in detail. FIGS. **11** and **12** are flow charts illustrating two embodiments of a non-existing domain traffic control method. FIG. **11** illustrates the embodiment of modifying the A record of the response data packet with the IP address of the optimal search guide server. The database **926** of the fifth NXDOMAIN redirector **920** stores the IP address of search

guide servers. For convenience of explanation, the fifth NXDOMAIN redirector **920** stores in the database **926** the IP address of the search guide server **280**. The fifth NXDOMAIN redirector **920** also stores in the database **926** predetermined criteria of determining the optimal search guide server. The predetermined criteria are defined by whether a search guide server stores relevant content to the initial DNS query. As one example, the fifth NXDOMAIN redirector **920** determines content relevant to a domain name initially sought by the user **6 906**, such as tttoyplace.com. Then, the fifth NXDOMAIN redirector **920** determines which search guide server stores the relevant content. As a result, the fifth NXDOMAIN redirector **920** determines that the search guide server **280** is the optimal search guide server at block **1102**. At block **1102**, the fifth local name server **910** returns the data packet with the modified A record of the optimal search guide server to the fifth local name server **910**, which in turn forwards the response data packet with the modified A record to the user **6 906**(flow **965**). By way of example only, the modified A record of the optimal search guide server includes the IP address of the search guide server **280** at block **1102**.

[0062] At block **1104**, the search guide server **280** receives a request from the user **6 906**. At this time, the search guide server **280** may obtain a full URL from the user **6 906**. At block **1104**, the search guide server **280** evaluates the full URL and is able to determine whether it stores relevant landing pages in the database **282** based on the evaluation of the full URL. At block **1108**, the search guide server **280** is also able to determine whether other search guide servers may store better landing pages. The search guide server **280** may redirect the request of the user **6 906** to other search guide servers having better landing pages. At block **1110**, the user **6 906** may obtain the landing pages having relevant information and services from the search guide server **280** or other search guide servers that store better landing pages.

[0063] In the embodiment described in conjunction with FIGS. **9-11**, the non-existing domain request may be controlled by modifying the A record of the response data packet. To modify the A record with the IP address of the optimal search guide server, the fifth NXDOMAIN redirector **920** may be equipped with the functions for determining the optimal search guide server and storing the IP address of the optimal search guide server. To some extent, the fifth NXDOMAIN redirector **920** may perform a selected function of the NXDOMAIN controller **270** described in conjunction with FIGS. **2** and **4-6**. In the embodiment of FIGS. **9-11**, the fifth NXDOMAIN redirector modifies the A record and the internet traffic directed to the non-existing domain may be controlled without involvement of the NXDOMAIN controller **970**. The NXDOMAIN controller **970** is used to implement the non-existing domain traffic control method of FIG. **12**.

[0064] FIG. **12** illustrates another embodiment of modifying the A record of the response data packet. At block **1202**, the A record of the response data packet is modified with the IP address of the fifth NXDOMAIN controller **970** and the fifth local name server **910** receives the response data packet. The fifth local name server **910** sends the response data packet to the user **6 906** (block **1202**). The fifth redirector **920** receives the response data packet and modifies the A record. Subsequent to the modification of the A record, the fifth NXDOMAIN redirector **920** sends the response data packet to the fifth local name server **910** (flow **977** in FIG. **9**). The fifth local name server **910** returns the response data packet to the user **6 906** as the A record has been modified (flow **965**). The user **6 906** sends a request to the NXDOMAIN controller **970** based on the A record at block **1202**. The NXDOMAIN controller **970** receives the request and returns information identifying the best search guide server **280** to the user **6 906** (block **1204**). The best search guide server **280** by the NXDOMAIN controller **970** is selected by an application level redirection rather than resolving a DNS. For example, an HTTP redirection may be used to redirect the user request from the NXDOMAIN controller **970** to the best search guide server. At block **1206**, the user **6 906** sends a request to the search guide server **280** and at block **1208**, the best search guide server (**280** in this embodiment) responds to the user **6 906** by providing landing pages. At block **1210**, the user **6 906** obtains information from the landing pages.

[0065] As described above in conjunction with FIGS. **9-12**, the internet traffic control system **900** may control the non-existing domain traffic by modifying the A record of the response data packet with either the IP address of the best search guide server or the IP address of the centralized NXDOMAIN controller operable to provide the information of the best search guide server. Instead of the modification on the NS record, the A record is modified by the fifth NXDOMAIN redirector **920**. Accordingly, the user **6 904** receives the response data packet subsequent to the modification. In addition, the A record is modified before the fifth local name server **910** receives the response data packet. The fifth local name server **910** may cache the modified A record. With regard to a next incoming DNS query, the fifth local name server **910** may provide the modified A record. Thus, the DNS response speed may be faster and overall load of the internet traffic control system **900** may be reduced.

[0066] When the A record is modified with the IP address of the best search guide server, the system construction may be simpler. When the A record is modified with the IP address of the NXDOMAIN controller **970**, the centralized non-existing domain traffic control may accomplish more organized and structured control over the non-existing domain traffic control. In addition to processing of the initial internet request as a result of the A record modification, the NXDOMAIN controller **970** may also process incoming DNS queries that result from modification of the NS record described above in connection with FIGS. **2** and **4-6**.

[0067] While various embodiments of the invention have been described, it will be apparent to those of ordinary skill in the art that many more embodiments and implementations are possible within the scope of the invention. Accordingly, the invention is not to be restricted except in light of the attached claims and their equivalents.

We claim:

1. An internet traffic control method for a non-existing domain, comprising:

installing a domain name service (DNS) module;

receiving a DNS query directed to the non-existing domain at the DNS module;

redirecting to a controller the DNS query by the DNS module;

determining at the controller an optimal search guide server operable to provide an alternative response to a non-existing domain request;

sending an IP address of the optimal search guide server to the DNS module; and

forwarding the IP address of the optimal search guide server to a user application which has sent the non-

existing domain request, thereby to direct the user application to access the optimal search guide server.

2. The method of claim **1**, further comprising:

determining that a first domain name response data packet to the DNS query indicates the non-existing domain; and

upon determination of the first domain name response data packet indicative of the non-existing domain, modifying a name server record of the data packet responsive to the DNS query.

3. The method of claim **1**, further comprising:

receiving another DNS query directed to an existing domain;

determining that a second domain name response data packet to another DNS query indicates an existing domain; and

upon determination of the second domain name response data packet indicative of the existing domain, returning existing domain information contained in the second domain name response data packet to the user application which has sent another DNS query without redirection of another DNS query to the controller.

4. The method of claim **1**, further comprising:

receiving a domain name of the non-existing domain request, and

evaluating the domain name to determine selected content relevant to the domain name.

5. The method of claim **4**, further comprising:

receiving an IP address of the DNS module; and

evaluating the IP address of the DNS module to determine a network location.

6. The method of claim **5**, wherein determining the optimal search guide server comprises determining the optimal search guide server operable to store a landing page relevant to the selected content and proximate to the network location wherein the network location indicates a location of the user application.

7. An internet traffic control system for a non-existing domain, comprising:

a DNS module operable to redirect a DNS query for the non-existing domain and comprising a redirector operable to modify a name server record of a domain name response data packet to the DNS query and indicative of the non-existing domain; and

a non-existing domain name controller operable to receive the redirected DNS query and determine an optimal search guide server that provides an alternative response to a non-existing domain response informing a user application of the non-existing domain;

wherein the non-existing domain name controller returns information of the optimal search guide server to the DNS module in response to the redirected DNS query.

8. The system of claim **7**, further comprising a plurality of internet service provider systems for providing an internet connection to a user application and in communication with the non-existing domain name controller wherein each internet service provider system comprises the DNS module and directs the user application to obtain a landing page provided by the optimal search guide server.

9. The system of claim **7**, further comprising an internet service provider system operable to provide an internet connection to a user application, the internet service provider system comprising the DNS module and the non-existing domain name controller.

10. The system of claim **7**, wherein the non-existing domain name controller comprises a first controller and a second controller, the first controller assigned to and in communication with a first internet service provider system and the second controller in communication with the second internet service provider system and located independently of the second internet service provider system, and

wherein the first controller determines the optimal search guide server for the first internet service provider system and the second controller determines the optimal search guide server for the second internet service provider system and a third internet service provider system.

11. The system of claim **7**, wherein the non-existing domain name controller comprises:

a database for storing information of the optimal search guide server and criteria that defines the optimal search guide server; and

a logic comprising inputs of a domain name of the non-existing domain and an IP address of the DNS module and an output of an IP address of the optimal search guide server, wherein the logic further operates to refine and update the information of the optimal search guide server and the criteria.

12. The system of claim **8**, wherein the DNS module of each internet service provider system comprises a local name server operable to receive the DNS query from the user application and to return a resultant IP address to the user application, and

wherein the redirector intercepts the response data packet indicative of the non-existing domain before the local name server receives the response data packet.

13. The system of claim **8**, wherein the DNS module of each internet service provider system comprises a local name server operable to receive the DNS query from the user application and return a resultant IP address to the user application, and

wherein the local name server operates to cache the modified name server record when necessary.

14. An internet traffic control method for a non-existing domain, comprising:

operating a local name server to receive a domain name system ("DNS") query from a user application comprising a browser wherein the DNS query comprises a first DNS query directed to an existing domain and a second DNS query directed to the non-existing domain;

communicating with an authorized name server to resolve the first and the second DNS queries;

receiving a DNS response from the authorized name server, the DNS response comprising a first DNS response corresponding to the first DNS query and a second DNS response corresponding to the second DNS query;

modifying a record of the second DNS response;

forwarding the first DNS response to the local name server without modification of the record;

receiving the first DNS response and the second DNS response at the local name server;

determining at a non-existing domain controller a search guide server operable to provide an alternative response to the user application which has sent the second DNS query; and

returning a resultant IP address of the search guide server to the user application.

15. The method of claim **14**, wherein modifying the record of the domain name resolution response comprises modifying a name server record of a DNS response packet; and further comprising:

redirecting the second DNS query to the non-existing domain name controller based on the modified name server record of the second DNS response wherein the local name server considers the non-existing domain name controller as the authorized name server.

16. The method of claim **14**, wherein modifying the record of the domain name resolution response comprises modifying an A record of the DNS response packet to add the resultant IP address of the search guide server.

17. The method of claim **14**, wherein modifying the record of the domain name resolution response comprises modifying an A record of the DNS response packet to add the IP address of the non-existing domain controller.

18. The method of claim **14**, wherein determining the search guide server comprises:

determining whether the search guide server stores a landing page relevant to a domain name contained in the second DNS query;

determining whether the search guide server is proximate to the user application; and

selecting the search guide server that stores the landing page relevant to the domain name contained in the second DNS query and proximate to the user application.

19. An internet traffic control system for a non-existing domain, comprising:

means for receiving and processing a DNS query from a user application;

means for redirecting the DNS query by modifying a predetermined record of a DNS response data packet to the DNS query, means for redirecting operable to determine that the DNS response data packet indicates the non-existing domain prior to the modification of the predetermined record; and

means for controlling internet traffic directed to the non-existing domain by responding to a redirected DNS query, means for controlling operable to determine an optimal search guide server which provides an alternative response to the user application which has sent the redirected DNS query;

wherein means for controlling further transmits an IP address of the optimal search guide server to the user application.

20. The system of claim **19**, wherein the means for controlling further comprises:

means for storing:

content information stored in a group of search guide servers;

a network location of the group of search guide servers; and

predetermined criteria for defining the optimal search guide server at least based on the content information and the network location of the group of search guide servers;

a logic comprising an input of a domain name of the redirected DNS query and network location information of the user application and an output of a resultant search guide server, the logic operable to generate the output based on the predetermined criteria;

wherein the logic is further operable to integrate in real time the content information and the network location of the group of search guide servers and update the predetermined criteria.

21. The system of claim **20**, wherein the resultant search guide server is operable to redirect the internet traffic associated with the non-existing domain to another search guide server, another search guide server being more proximate to the user application than the resultant search guide server, storing the content information more enhanced in quality and quantity than the resultant search guide server, or both.

* * * * *